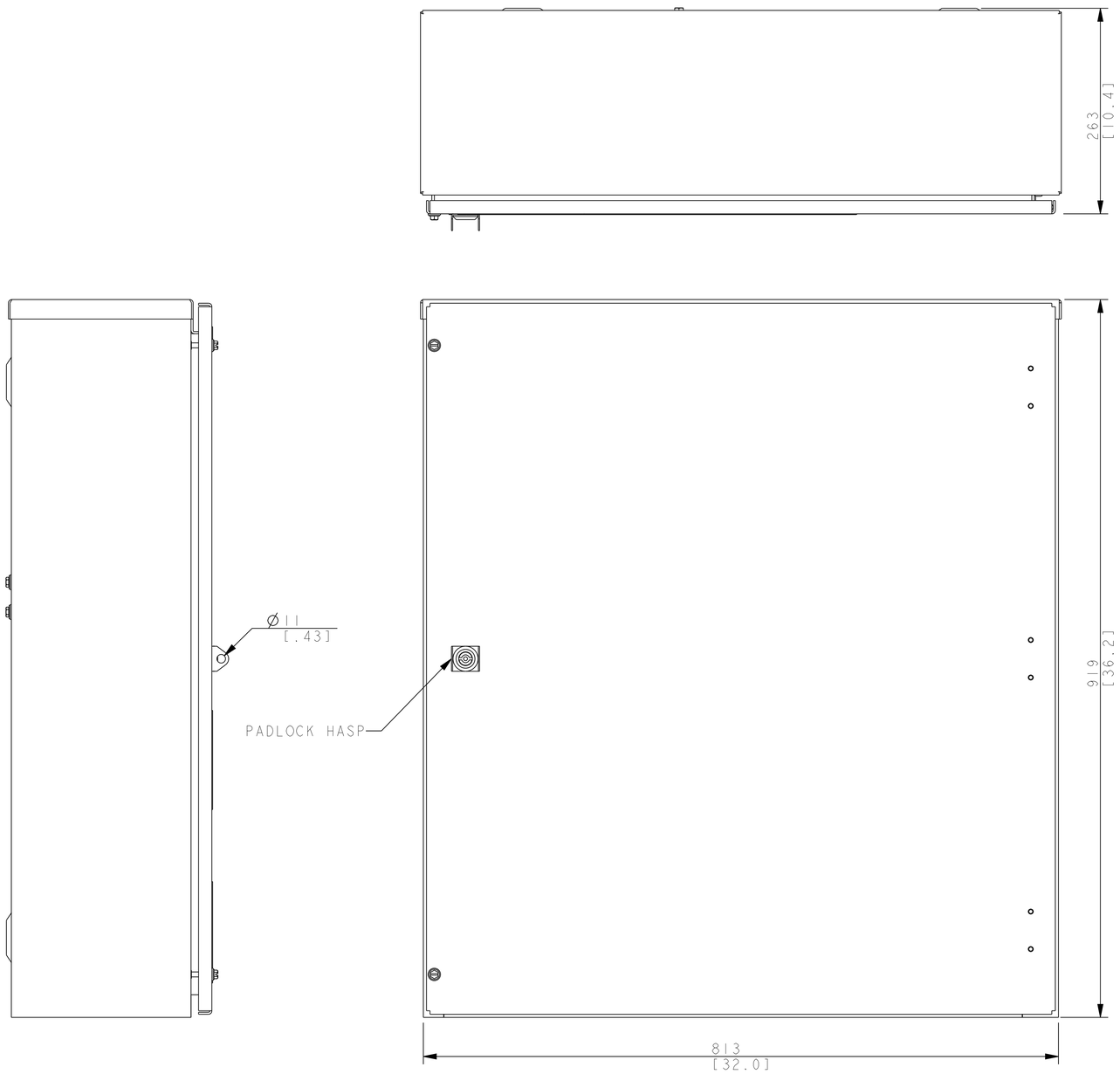

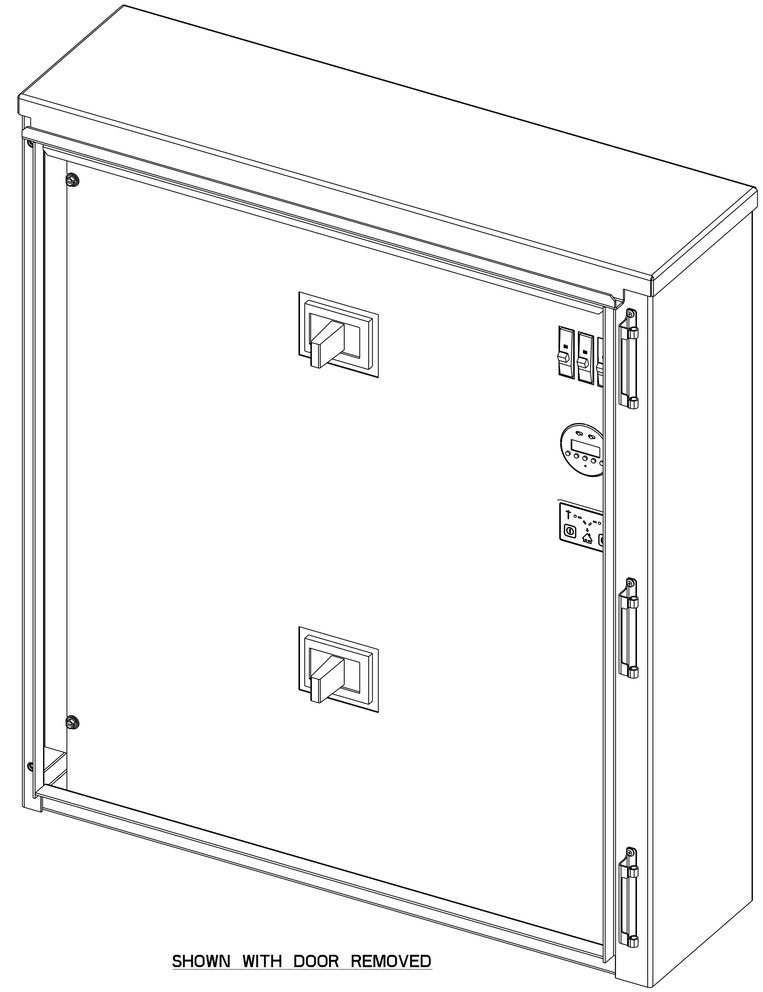

SHOWN WITH DOOR REMOVED

DIMENSIONS IN [ ] ARE INCHES.

FINISH:
NEMA 3R: ANSI 49 GRAY.
NEMA 3R SS: 316 STAINLESS STEEL

REFER TO OPERATOR'S MANUAL PRIOR TO INSTALLATION AND OPERATION OF UNIT.

POWER CABLES AND CONTROL WIRING MUST BE RUN IN METAL CONDUIT.

APPROXIMATE WEIGHT: 93.9 KG [207 LBS]

MODEL R
MPAC 500
400A 240V
SERVICE ENTRANCE
NEMA 3R
NEMA 3R SS

REV	DATE	ON COMPOSITE DWGS, SEE PART NO. FOR REVISION LEVEL	BY
-	8-5-08	NEW DRAWING [85807]	WSD

UNLESS OTHERWISE SPECIFIED -
1) DIMENSIONS ARE IN MILLIMETERS
2) TOLERANCES ARE:
X.XX ± 0.25
X.X ± 1.0
X ± 1.5
ANGLES ± 0° 30'
SURFACE FINISH ✓ MAX.

THIRD ANGLE PROJECTION

APPROVALS		DATE
DRAWN	WSD	8-5-08
CHECKED	WSD	8-5-08
APPROVED	AJH	8-5-08

KOHLER CO. METRIC | PRO-E

POWER SYSTEMS, KOHLER, WI 53044 U.S.A.

THIS DRAWING IN DESIGN AND DETAIL IS KOHLER CO. PROPERTY AND MUST NOT BE USED EXCEPT IN CONNECTION WITH KOHLER CO. WORK. ALL RIGHTS OF DESIGN OR INVENTION ARE RESERVED.

TITLE
DIMENSION PRINT

SCALE 0.30 | CAD NO. | SHEET 1 of 2

DWG NO. ADV-7591 | D

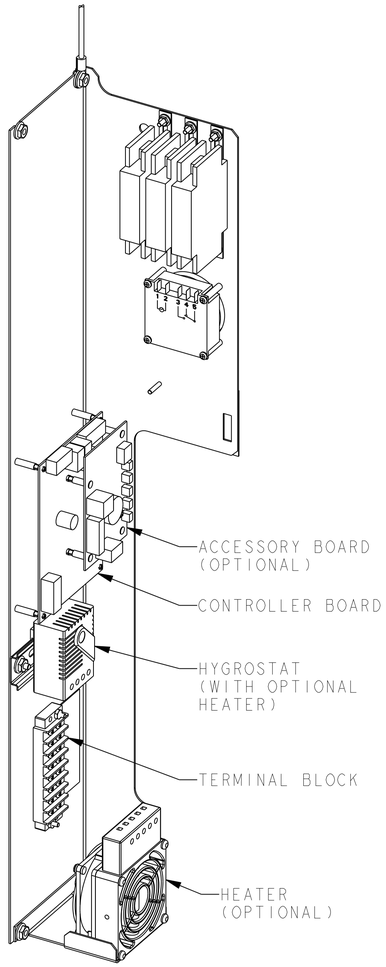

ACCESSORY PANEL

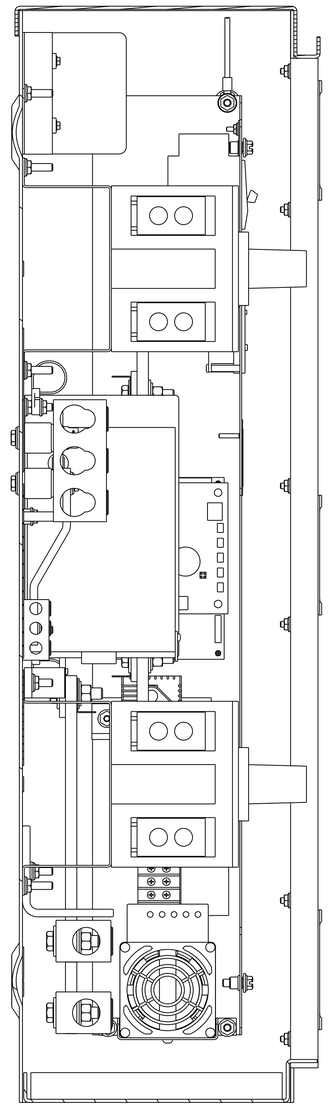

SECTION B-B

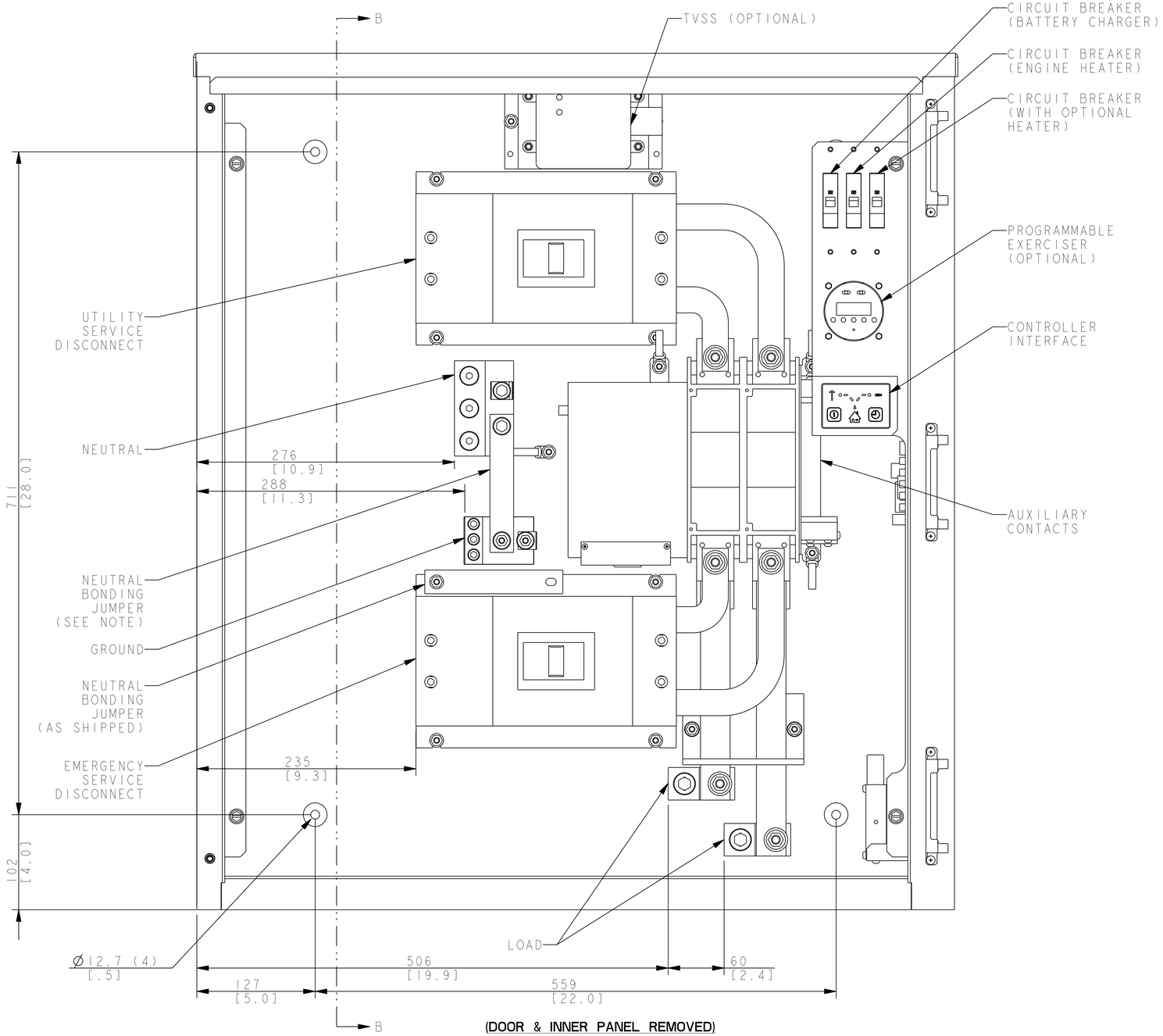

(DOOR & INNER PANEL REMOVED)

NOTE:
NEUTRAL TO GROUND BONDING JUMPER IS SHIPPED UNBONDED.
INSTALL FOR SERVICE ENTRANCE APPLICATIONS AS REQUIRED.

SERVICE DISCONNECT BREAKERS ARE 400A, 80% RATED.
CONTINUOUS LOAD CURRENT IS NOT TO EXCEED 80% OF
BREAKER RATING.

SCREW TYPE TERMINALS FOR EXTERNAL POWER CONNECTION			
SWITCH RATING (AMPS)	RANGE OF AL-CU WIRE SIZES		
	POWER CONNECTIONS (PER PHASE)	NEUTRAL	GROUND
400	(2) 1/0 TO 250 KCMIL	(6) 1/0 TO 250 KCMIL	(3) #14 TO 1/0

MODEL R
MPAC 500
400A 240V
SERVICE ENTRANCE
NEMA 3R
NEMA 3R SS

REV	DATE	ON COMPOSITE DWGS, SEE PART NO. FOR REVISION LEVEL	BY
-	8-5-08	NEW DRAWING [85807]	WSD

UNLESS OTHERWISE SPECIFIED -
1) DIMENSIONS ARE IN MILLIMETERS
2) TOLERANCES ARE:
X.XX ± 0.25
X.X ± 1.0
X ± 1.5
ANGLES ± 0° 30'
SURFACE FINISH MAX.
THIRD ANGLE PROJECTION

APPROVALS		DATE
DRAWN	WSD	8-5-08
CHECKED	WSD	8-5-08
APPROVED	AJH	8-5-08

KOHLER CO. METRIC PRO-E
POWER SYSTEMS, KOHLER, WI 53044 U.S.A.

THIS DRAWING IN DESIGN AND DETAIL IS KOHLER CO. PROPERTY AND MUST NOT BE USED EXCEPT IN CONNECTION WITH KOHLER CO. WORK. ALL RIGHTS OF DESIGN OR INVENTION ARE RESERVED.

TITLE DIMENSION PRINT

SCALE 0.40 | CAD NO. | SHEET 2 of 2
DWG NO. ADV-7591 | D