REV	DATE	REVISION	BY	N/T
–	2-5-07	NEW DRAWING [80761]	CRS	

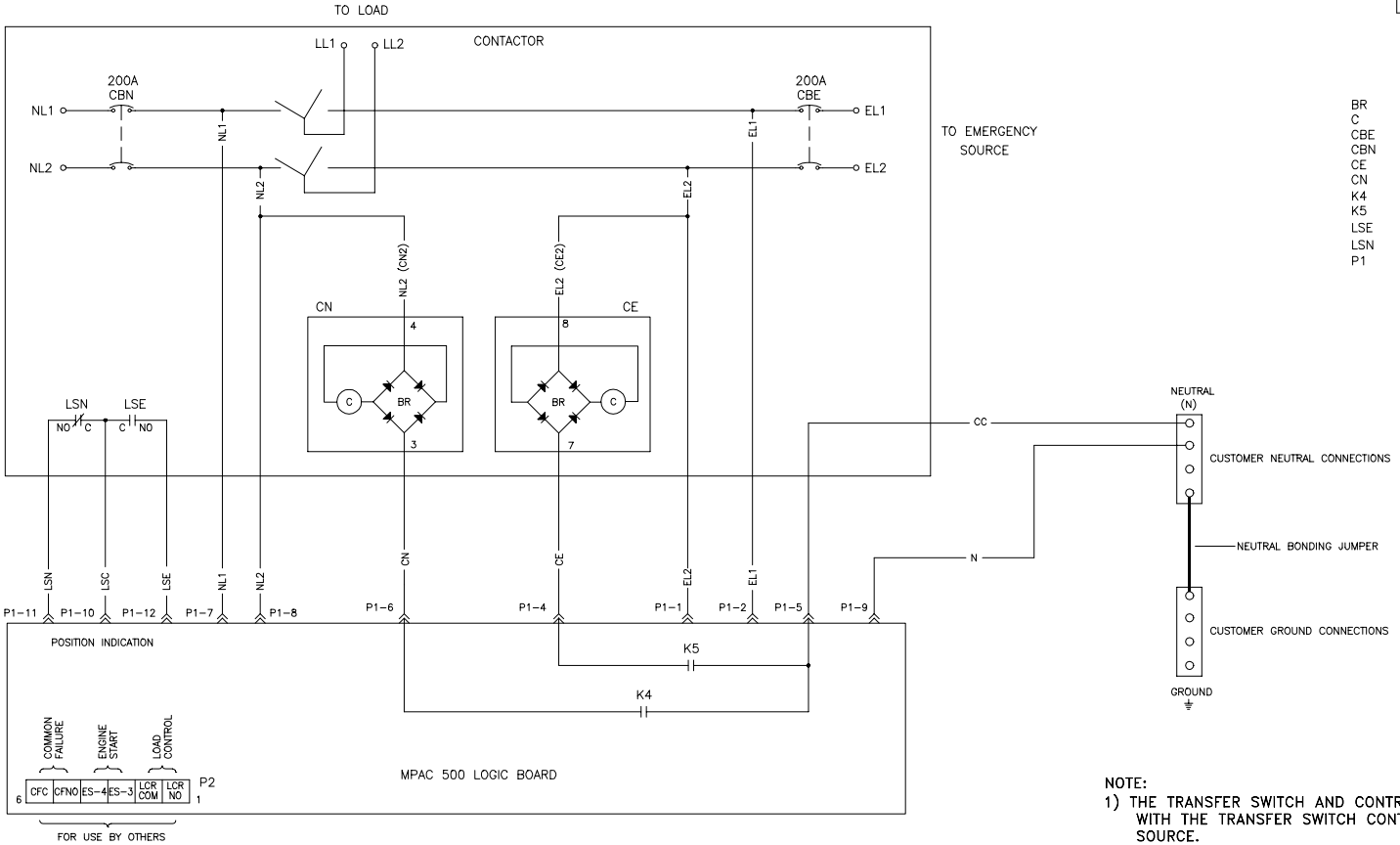

LEGEND

BR	BRIDGE RECTIFIER
C	COIL
CBE	SERVICE DISCONNECT EMERGENCY
CBN	SERVICE DISCONNECT NORMAL
CE	TRANFER COIL (EMERGENCY TRANSFER)
CN	TRANSFER COIL (NORMAL TRANSFER)
K4	NORMAL RELAY CONTACTS
K5	EMERGENCY RELAY CONTACTS
LSE	LIMITS SWITCH EMERGENCY CONTACTS
LSN	LIMIT SWITCH NORMAL CONTACTS
P1	CONNECTOR

NOTE:

1) THE TRANSFER SWITCH AND CONTROLS ARE SHOWN DE-ENERGIZED WITH THE TRANSFER SWITCH CONTACTS CLOSED ON THE NORMAL SOURCE.
2) REFER TO THE TRANSFER SWITCH AND GENERATOR OPERATION AND INSTALLATION MANUALS PRIOR TO INSTALLATION.
3) SERVICE DISCONNECT CIRCUIT BREAKERS ARE SQUARE D QOM2 TYPE, 200A, 80% RATED.

BATTERY CHARGER C/B (STD) TB1-4 — TB1-2

CB1-15A — TB1-1, LL2

NOTE:

1. ENGINE START CONTACTS ES1 & ES2 RATED 30 VOLT, 1 AMP. WIRING PROVIDED BY OTHERS.
2. CONTACTOR SHOWN IN NORMAL WITH NO POWER APPLIED.
3. FOR WIRING DIAGRAM SEE GM49862.

MPAC 500
SERVICE ENTRANCE 200A

UNLESS OTHERWISE SPECIFIED – 1) DIMENSIONS ARE IN INCHES 2) TOLERANCES ARE: .XXX± .010 .XX ± .030 .X ± .060 ANGLES± 1/2° SURFACE FINISH MAX. FRACTIONS ±

APPROVALS		DATE
DRAWN	CRS	2-5-07
CHECKED	AJH	2-5-07
APPROVED	AJH	2-5-07

KOHLER CO.
POWER SYSTEMS, KOHLER, WI 53044 U.S.A.
THIS DRAWING, IN DESIGN AND DETAIL, IS KOHLER CO. PROPERTY AND MUST NOT BE USED EXCEPT IN CONNECTION WITH KOHLER CO. WORK. ALL RIGHTS OF DESIGN OR INVENTION ARE RESERVED.

TITLE: DIAGRAM, SCHEMATIC

SCALE / / / | CAD NO. GM49861.DWG | SHEET 1-1

PLOTTED | DWG. NO. GM49861 | D