REV	DATE	REVISION	BY	NT
–	2-7-07	NEW DRAWING [80761]	CRS	

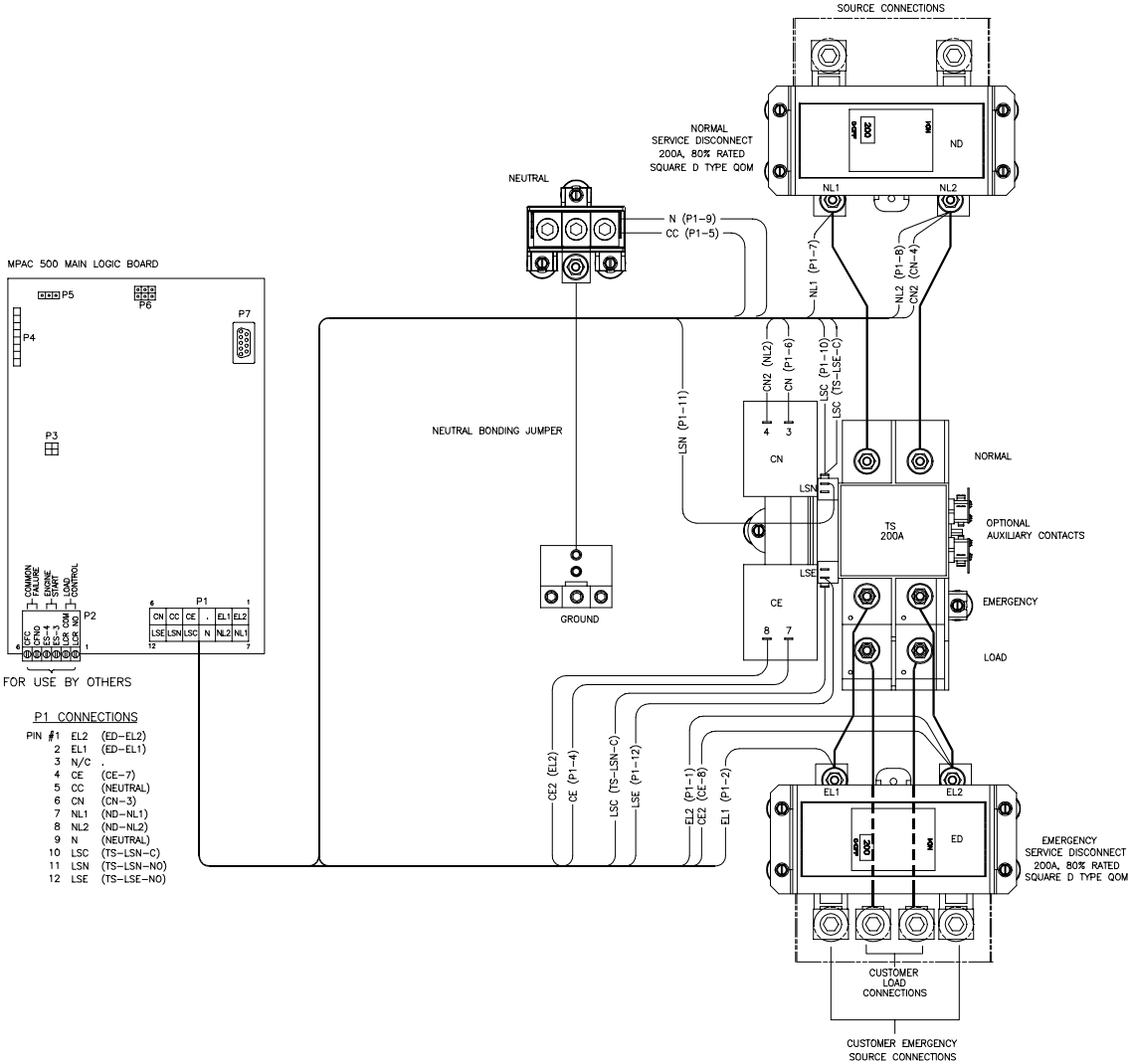

LEGEND

CN – TRANSFER COIL NORMAL
CE – TRANSFER COIL EMERGENCY
ED – EMERGENCY SERVICE DISCONNECT
LSN – POSITION SENSE SWITCH NORMAL
LSE – POSITION SENSE SWITCH EMERGENCY
GND – ENCLOSURE GROUND
ND – NORMAL SERVICE DISCONNECT
P(#) – CONNECTOR
TS – TRANSFER SWITCH/CONTACTOR

P1 CONNECTIONS

PIN	#1	EL2	(ED–EL2)
	2	EL1	(ED–EL1)
	3	N/C	.
	4	CE	(CE–7)
	5	CC	(NEUTRAL)
	6	CN	(CN–3)
	7	NL1	(ND–NL1)
	8	NL2	(ND–NL2)
	9	N	(NEUTRAL)
	10	LSC	(TS–LSN–C)
	11	LSN	(TS–LSN–NO)
	12	LSE	(TS–LSE–NO)

SCREW TYPE TERMINALS FOR EXTERNAL POWER CONNECTION					
SWITCH RATING (AMPS)	RANGE OF AL–CU WIRE SIZES				
	CUSTOMER LOAD	CUSTOMER NORMAL	CUSTOMER EMERGENCY	NEUTRAL	GROUND
200	TWO #6–250 MCM	TWO #4–300 MCM	TWO #4–300 MCM	THREE #4–250 MCM	THREE 1/0–14 AWG

MODEL R
SERVICE ENTRANCE
200A
FOR SCHEMATIC SEE GM49861

UNLESS OTHERWISE SPECIFIED – 1) DIMENSIONS ARE IN INCHES 2) TOLERANCES ARE: .XXX± .010 ANGLES± 1/2° .XX ± .030 SURFACE FINISH .X ± .060 MAX. FRACTIONS ±

APPROVALS		DATE
DRAWN	AJH/CRS	2-5-07
CHECKED	AJH	2-5-07
APPROVED	AJH	2-5-07

KOHLER CO.
POWER SYSTEMS, KOHLER, WI 53044 U.S.A.
THIS DRAWING, IN DESIGN AND DETAIL, IS KOHLER CO. PROPERTY AND MUST NOT BE USED EXCEPT IN CONNECTION WITH KOHLER CO. WORK. ALL RIGHTS OF DESIGN OR INVENTION ARE RESERVED.

TITLE DIAGRAM, WIRING
SCALE / / / CAD NO. GM49862A.DWG SHEET 1–2
PLOTTED DWG. NO. GM49862 D

REV	DATE	REVISION	BY	NT
–	2-6-07	NEW DRAWING [80761]	CRS	

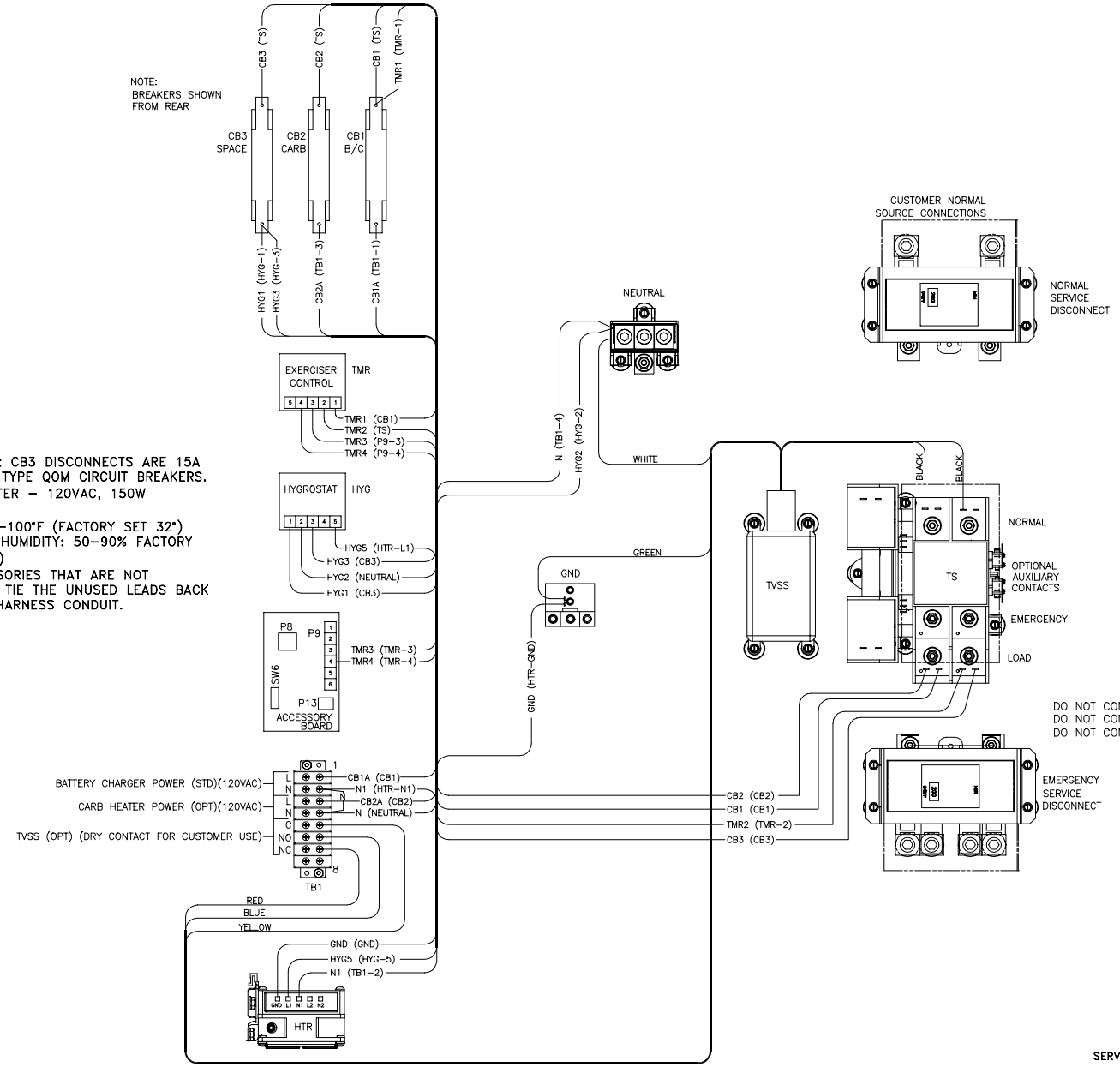

NOTES:
1) CB1, CB2 & CB3 DISCONNECTS ARE 15A SQUARE D TYPE QOM CIRCUIT BREAKERS.
2) SPACE HEATER – 120VAC, 150W
3) HYGROSTAT
   TEMP: 32–100°F (FACTORY SET 32°)
   RELATIVE HUMIDITY: 50–90% FACTORY SET (65%)
4) FOR ACCESSORIES THAT ARE NOT INSTALLED, TIE THE UNUSED LEADS BACK INTO THE HARNESS CONDUIT.

LEGEND

B/C – BATTERY CHARGER C/B DISCONNECT (STANDARD)
CARB – CARBURETOR HEATER C/B DISCONNECT (OPTIONAL)
CB(#) – CIRCUIT BREAKER
GND – ENCLOSURE GROUND
HTR – SPACE HEATER (OPTIONAL)
HYG – HYGROSTAT (OPTIONAL)
INSUL(#) – INSULINK
NEUTRAL – ENCLOSURE NEUTRAL
P(#) – CONNECTOR
SPACE – SPACE HEATER C/B DISCONNECT (OPTIONAL)
TB1 – CUSTOMER CONNECT TERMINAL BLOCK
TMR – EXERCISER CONTROL (OPTIONAL)
TS – TRANSFER SWITCH/CONTACTOR
TVSS – TRANSIENT VOLTAGE SURGE SUPPRESSOR (OPTIONAL)

ACCESSORY LOAD CONNECTIONS:

DO NOT CONNECT CB2 LEAD IF CB2 BREAKER NOT INCLUDED
DO NOT CONNECT CB3 LEAD IF CB3 BREAKER NOT INCLUDED
DO NOT CONNECT TMR2 LEAD IF TMR (EXERCISER) NOT INCLUDED

MODEL R
SERVICE ENTRANCE
200A
OPTIONAL ACCESSORY DIAGRAMS

UNLESS OTHERWISE SPECIFIED – 1) DIMENSIONS ARE IN INCHES 2) TOLERANCES AND: .XXX± .010 ANGLES ± 1/2° .XX ± .030 SURFACE FINISH .X ± .060 MAX. FRACTIONS ±

APPROVALS		DATE
DRAWN	AJH/CRS	2-5-07
CHECKED	AJH	2-5-07
APPROVED	AJH	2-5-07

KOHLER CO.
POWER SYSTEMS, KOHLER, WI 53044 U.S.A.
THIS DRAWING, IN DESIGN AND DETAIL, IS KOHLER CO. PROPERTY AND MUST NOT BE USED EXCEPT IN CONNECTION WITH KOHLER CO. WORK. ALL RIGHTS OF DESIGN OR INVENTION ARE RESERVED.

TITLE: DIAGRAM, WIRING
SCALE: / / / CAD NO. GM49862B.DWG SHEET 2-2
PLOTTED DWG. NO. GM49862 D